OPERATOR'S AND PARTS MANUAL

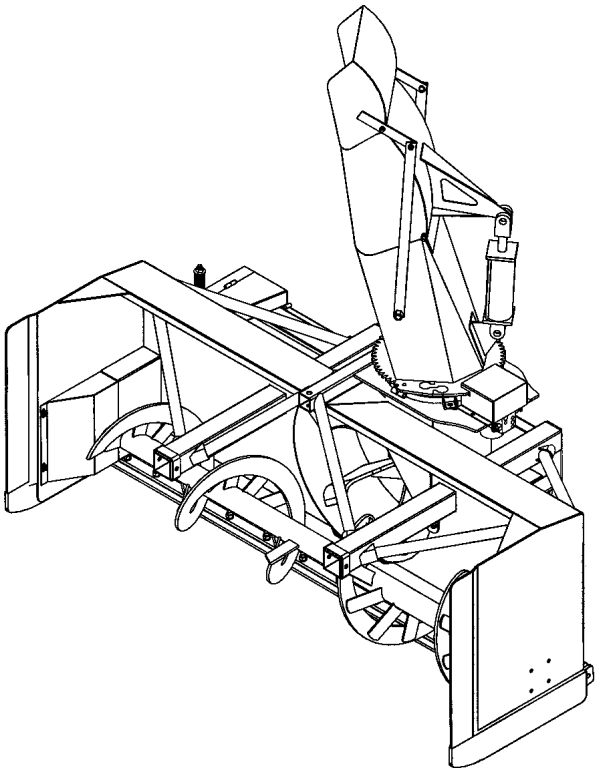

SNOWBLOWER

SA92 IA MODEL

SERIAL NO. 2028772 AND UP

OM 0289-A
10/02

BER-VAC

by RAD Technologies Inc.

TABLE OF CONTENT

INTRODUCTION – TO THE PURCHASER 3

SAFETY PRECAUTIONS 4
- Before Operation 4
- Notice 5
- The Snowblower 5
  - Before Operation 5
  - Snowblower Operation 6
- The Tractor 7
  - General Information 7
  - Operating the Tractor 7
  - During Operation 7
- Maintenance 8
- Transporting 8
- Storage 8

DECALS 9

ASSEMBLY 10
- Snowblower Assembly 10
  - Driveline Installation 10
  - Three Point Hitch Installation 11
  - Installation with Quick Hitch 11
  - Snowblower Installation 12
  - Detaching Snowblower from Tractor 12
  - Chute Installation 13
  - Rear Hydraulic Blade 8106A Installation (Option) 14
  - Adjustment of Tivar Cutting Edge for Rear Hydraulic Blade 14

OPERATION 15
- General Preparation 15
- Operating Controls 15
  - Raising and Lowering the Snowblower 15
  - Drive Shaft Operation 15
  - Deflector Adjustment 15
  - Work and Travel Speed 15
- Snow Removal Methods 16

MAINTENANCE 16
- Maintenance 16
  - Tire Pressure 16
  - Storage 16
  - Lubrication 16

TABLE OF CONTENT

PARTS 18
Introduction 18
Snowblower SA92IA..... 19
Three Point Hitch 21
Semi-Industrial Chute -666461 22
Hydraulic Rotation 23
Gearbox – 665459..... 24
Driveline - 665227 25
Rear Hydraulic Blade 8106A - Option..... 26

WARRANTY 27

TORQUE SPECIFICATION TABLE 28

INTRODUCTION

TO THE PURCHASER

All BER-VAC and BLIZZARD products are designed to give safe, dependable service if they are operated and maintained according to instructions. **Read and understand this manual before operation.**

This manual has been prepared to assist the owner and operators in the safe operation and suitable maintenance of the implements. The information was applicable to products at the time of manufacture and does not include modifications made afterwards.

Read and understand this operator's manual before attempting to put an implement into service. Familiarize yourself with the operating instructions and all the safety recommendations contained in this manual and those labelled on the implements and on the tractor. Follow the safety recommendations and make sure that those with whom you work follow them.

Illustrations

The illustrations may not necessarily reproduce the full detail and the exact shape of the parts or depict the actual models, but are intended for reference only

Direction Reference

Right Hand and Left Hand are determined by those seen by the conductor looking at the machine while operating.

To assist your dealer in handling your needs, please record hereafter the model number and serial number of your implement and tractor. It is also advisable to supply them to your insurance company. It will be helpful in the event that an implement or tractor is lost or stolen.

MODEL : _____

SERIAL NUMBER : _____

DATE OF PURCHASE : _____

SAFETY PRECAUTIONS

SAFETY FIRST

This symbol, the industry's "Safety Alert Symbol", is used throughout this manual and on labels on the machine itself to warn of the possibility of personal injury. Read these instructions carefully. It is essential that you read the instructions and safety regulations before you attempt to assemble or use this unit.

DANGER : Indicates an immediately hazardous situation which, if not avoided, will result in death or serious injury.

WARNING : Indicates a potentially hazardous situation which, if not avoided, could result in death or serious injury.

CAUTION : Indicates a potentially hazardous situation which, if not avoided, may result in minor or moderate injury.

IMPORTANT : Indicates that equipment or property damage could result if instructions are not followed.

NOTE : Gives helpful information.

All products are designed to give safe, dependable service if they are operated and maintained according to instructions. **Read and understand this manual before operation**. It is the owner's responsibility to be certain anyone operating this product reads this manual., and all other applicable manuals, to become familiar with this equipment and all safety precautions. Failure to do so could result in serious personal injury or equipment damage. If you have any questions, consult your dealer.

BEFORE OPERATION

Children

Tragic accidents can occur if the operator is not alert to the presence of children. Children are generally attracted to machines and the work being done. Never assume children will remain where you last saw them.

1. Keep children out of the operating area and under the watchful eye of another responsible adult.
2. Be alert and turn machine off if children enter the work area.
3. Before and when backing, look behind and look for small children.
4. Never carry children while operating the machine. They may fall off and be seriously injured or interfere with safe operation of the machine.
5. Never allow children to play on the machine or attachment even when turned off.
6. Never allow children to operate the machine even under adult supervision.
7. Use extra care when approaching blind corners, shrubs, trees, or other obstructions that might hide children from sight.

NOTICE

A safe operator is the best insurance against accidents. All operators, no matter how experienced they may be, should read this Operator's Manual and all other related manuals before attempting to operate an implement. Please read the following section and pay particular attention to all safety recommendations contained in this manual and those labelled on the implements and on the tractor.

THE SNOWBLOWER

Before Operation

1. Read and understand this operator's manual and tractor operator's manual. Know how to operate all controls and how to stop the unit and disengage the controls quickly.

2. Never wear loose, torn, or bulky clothing around the tractor and implement. It may catch on moving parts or controls, leading to the risk of accident.

3. Before the snow season, thoroughly inspect the area where the equipment is to be used and remove all doormats, sleds, boards and other foreign objects.

4. Disengage clutch and shift into neutral before starting the engine.

5. Do not operate equipment in wintertime without wearing adequate winter garments.

6. Never attempt to make any adjustments while engine is running. Read this manual carefully to acquaint yourself with the equipment as well as the tractor operator's manual. Working with unfamiliar equipment can lead to accidents. Be thoroughly familiar with the controls and proper use of the equipment. Know how to stop the unit and disengage the controls quickly.

7. Keep all shields in place and properly tighten all mounting hardware.

8. Periodically, inspect all moving parts for wear and replace with authorized service parts if an excessive amount of wear is present.

9. Replace all missing, illegible, or damaged safety and warning decals. See list of decals in the operator's manual.

10. Do not modify or alter this equipment or any of its components, or any equipment function without first consulting your dealer.

11. Keep safety decals clean of dirt and grime.

Snowblower Operation

1. Before leaving the tractor unattended, take all possible precautions. Disengage the PTO, stop the engine and remove the ignition key. Lower the implement to the ground.
2. Before starting the snowblower, remove any ice that has accumulated in the auger/impeller.
3. Watch carefully for foreign objects that could enter the blower while operating.
4. Be sure the clutch switch/lever is in OFF position before starting engine.
5. Do not put hands or feet near rotation parts. Keep clear of discharge opening at all times.
6. Exercise extreme caution when operating on or crossing a gravel drive, walks, or roads. Stay alert for hidden hazards or traffic. Do not carry passengers.
7. Adjust collector housing height to clear gravel or crushed rock surface.
8. Stop the engine, remove the key, and allow the rotating parts to stop before unclogging the collector/impeller housing or chute, and making any repairs, adjustments or inspections. Use only a 36" long piece of wood to unclog blower.
9. If the snowblower starts to vibrate abnormally, stop the engine immediately and check for cause. Excessive vibration is generally a sign of trouble.
10. Do not run the engine indoors except when starting engine and transporting attachment in or out of building. Carbon monoxide gas is colorless, odorless and deadly.
11. Exercise extreme caution when changing direction on slopes. Do not attempt to operate on steep slopes.
12. Never operate snowblower without guards, and other safety protective devices in place.
13. Never operate snowblower near glass enclosures, automobiles, window wells, embankments, etc., without proper adjustment of snow discharge angle.
14. Never operate machine at high transport speeds on a slippery surface.
15. Use extra caution when backing up.
16. Do not direct discharge at bystanders or animals. Ejected objects may cause injury.
17. Disengage power to auger/impeller when transporting or when not in use.
18. Never operate the snowblower without good visibility and lighting.
19. Prolonged exposure to loud noise can cause impairment or loss of hearing. Wear a suitable hearing protective device such as earmuffs or earplugs to protect against objectionable or uncomfortable noises

THE TRACTOR

General Information

1. Read the operator's manual carefully before using tractor. Lack of operating knowledge can lead to accidents.
2. Do not permit anyone but the operator to ride on the tractor. There is no safe place for extra riders.

Operating the Tractor

1. Never run the tractor engine in a closed building without adequate ventilation, as the exhaust fumes are very dangerous.
2. Never allow an open flame near the fuel tank or battery.
3. Make sure the shield is installed when using a PTO-driven equipment and always replace the shield if damaged.
4. Always bring the tractor to a complete stop, shut off the engine, lower the implement to the ground and remove the ignition key before leaving the tractor.
5. Never park the tractor on a steep slope.
6. Do not attempt to operate on steep slopes.
7. Use of tire chains for better traction and stability is recommended.
8. Always drive the tractor at speeds compatible with safety, especially when operating over rough ground, crossing ditches, or when turning.
9. Handle fuel with care, as it is highly flammable.
10. Use approved fuel container.
11. Never add fuel to a running engine or a hot engine.
12. Fill fuel tank outdoors with extreme care. Never fill fuel tank indoors. Replace fuel cap securely and wipe up spilled fuel.
13. Never allow anyone to operate the snowblower until they are thoroughly familiar with basic tractor and snowblower operation.
14. Make sure the tractor is counterweighted as recommended by your dealer. Weights provide the necessary balance to prevent tip-over or loss of traction or steering.
15. Always make sure all snowblower components are properly installed and securely fastened BEFORE operation.

During Operation

1. Do not allow anyone to ride on the tractor/snowblower at any time. There is no safe place for passengers on this equipment. The operator MUST sit in the tractor seat.
2. Eye and hearing protection is recommended when operating the snowblower.
3. Operate only during daylight hours, or when the area is well lit with bright artificial light.
4. Disengage the PTO (turn to “OFF”), place the transmission in neutral, set the parking brake, shut off the engine and remove the key, and make sure rotating components have stopped BEFORE leaving the operator’s seat.
5. Inspect the snowblower after striking any foreign object to assure that all snowblower parts are safe and secure and not damaged.

MAINTENANCE

Park the tractor/snowblower on level ground, set the parking brake, disengage the PTO, shut off the engine, remove the key, and lower the implement to the ground BEFORE making any snowblower adjustments.

1. To avoid injury, do not adjust, unclog or service the snowblower with the tractor engine running. Making sure rotating components have completely stopped before leaving the operator's seat
2. Keep the tractor/snowblower clean. Snow and ice build-up can lead to malfunction or personal injury from thawing and refreezing in garage.
3. Always wear eye protection when cleaning or servicing the snowblower.
4. Do not work under any part of the tractor or snowblower, unless it is securely supported by safety stands.
5. Make sure all shields and guards are securely in place following all service, cleaning, or repair work.
6. Do not modify or alter this equipment or any of its components or operating functions. If you have questions concerning modifications, consult with your dealer.

TRANSPORTING

1. If the tractor/snowblower is to be driven on public roads, it must be equipped with an SMV (Slow Moving Vehicle) sign. Check local traffic codes that may apply to unit usage on public roads and highways in your area.
2. Be alert for all other traffic when driving the tractor/snowblower on public roads or highways.

STORAGE

Before storing the snowblower, certain pre-cautions should be taken to protect it from deterioration.

1. Clean the snowblower thoroughly.
2. Make all the necessary repairs.
3. Replace all Safety Signs that are damaged, lost, or otherwise become illegible. If a part to be replaced has a sign on it, obtain a new safety sign from your dealer and install it in the same place as on the removed part.
4. Repaint all parts from which paint has worn or peeled.
5. Lubricate the snowblower as instructed under **"Lubrication"** section.
6. When the snowblower is dry, oil all moving parts. Apply oil liberally to all surfaces to protect against rust.
7. Store in a dry place.

DECALS

Replace Immediately if Damaged

BER-VAC
RAD TECHNOLOGIES INC.

2500316

Located on driveline guard

DANGER

ROTATING DRIVELINE

CONTACT CAN CAUSE DEATH KEEP

PEOPLE AND CLOTHING WELL CLEAR

DO NOT OPERATE WITHOUT

- ALL DRIVELINE, TRACTOR AND EQUIPMENT SHIELDS IN PLACE
- DRIVELINES SECURELY ATTACHED AT BOTH ENDS
- DRIVELINE SHIELDS THAT TURN FREELY ON DRIVELINE

TRANSMISSION ROTATIVE À CARDAN

TOUT CONTACT PEUT CAUSER LA MORT

TENIR LES VÊTEMENTS ET PERSONNES À L'ÉCART

NE PAS OPÉRER SANS

- QUE TOUS LES PROTECTEURS DU TRACTEUR, DE L'ÉQUIPEMENT ET DE L'ARBRE À CARDAN SOIENT EN PLACE.
- L'ARBRE À CARDAN FIXÉ SOLIDEMENT À CHAQUE BOUT
- QUE LES PROTECTEURS TOURNENT LIBREMENT SUR L'ARBRE À CARDAN

88

656781

WARNING

FAILURE TO FOLLOW SAFE OPERATING PROCEDURES MAY RESULT IN INJURY.

- FOR SAFE OPERATION FOLLOW ALL OPERATING INSTRUCTIONS AND SAFETY PRECAUTIONS IN OPERATOR'S MANUAL.
- EYE PROTECTION MUST BE WORN AT ALL TIMES.
- KEEP HANDS, FEET AND CLOTHING AWAY FROM POWER DRIVEN PARTS.
- STOP ENGINE BEFORE LEAVING OPERATOR POSITION.
- WAIT FOR ALL MOVEMENTS TO STOP BEFORE STARTING TO ADJUST, LUBRICATE, CLEAN OR UNCLOG THE MACHINE.
- KEEP THE AREA OF OPERATION CLEAR OF ALL PERSONS AND ANIMALS.
- KEEP ALL GUARDS AND SHIELDS IN PLACE.
- NEVER DIRECT DISCHARGE TOWARD BYSTANDERS, BUILDINGS, CARS ETC.
- ALWAYS USE A DUST MASK WHEN WORKING IN DUSTY CONDITIONS.
- KEEP PLASTIC MATERIALS AWAY FROM INTENSE HEAT AND OPEN FLAME.
- NEVER ALLOW PASSENGERS ON THE ATTACHMENT.

229

660988

MISE EN GARDE

NÉGLIGER DE SUIVRE LES PROCÉDURES SÉCURITAIRES D'UTILISATION PEUT ENTRAÎNER DES BLESSURES.

- POUR UNE UTILISATION SÉCURITAIRE, SUIVRE TOUTES LES INSTRUCTIONS D'UTILISATION ET PRÉCAUTIONS SÉCURITAIRES DANS LE MANUEL DE L'OPÉRATEUR.
- PORTER DES LUNETTES DE SÉCURITÉ EN TOUT TEMPS.
- GARDER MAINS, PIEDS ET VÊTEMENTS ÉLOIGNÉS DES PIÈCES MOTRICES.
- ARRÊTER LE MOTEUR AVANT DE QUITTER LA POSITION DE L'OPÉRATEUR.
- ATTENDRE QUE TOUS LES MOUVEMENTS SOIENT ARRÊTÉS AVANT D'AJUSTER, LUBRIFIER, NETTOYER OU DÉBLOQUER LA MACHINE.
- GARDER L'ENDROIT D'UTILISATION DÉGAGÉ DE TOUTES PERSONNES ET ANIMAUX.
- GARDER TOUS LES ÉCRANS PROTECTEURS EN PLACE.
- JAMAIS DIRIGER L'ÉVACUATION VERS DES PIÉTONS, BÂTIMENTS, AUTOMOBILES, ETC.
- TOUJOURS UTILISER UN MASQUE À POUSSIÈRE DANS UN ENVIRONNEMENT POUSSIÉREUX.
- GARDER TOUTES LES MATIÈRES PLASTIQUES ÉLOIGNÉES DE LA CHALEUR INTENSE ET DES FLAMMES.
- NE JAMAIS PERMETTRE DE PASSAGERS SUR CETTE MACHINE.

220

660989

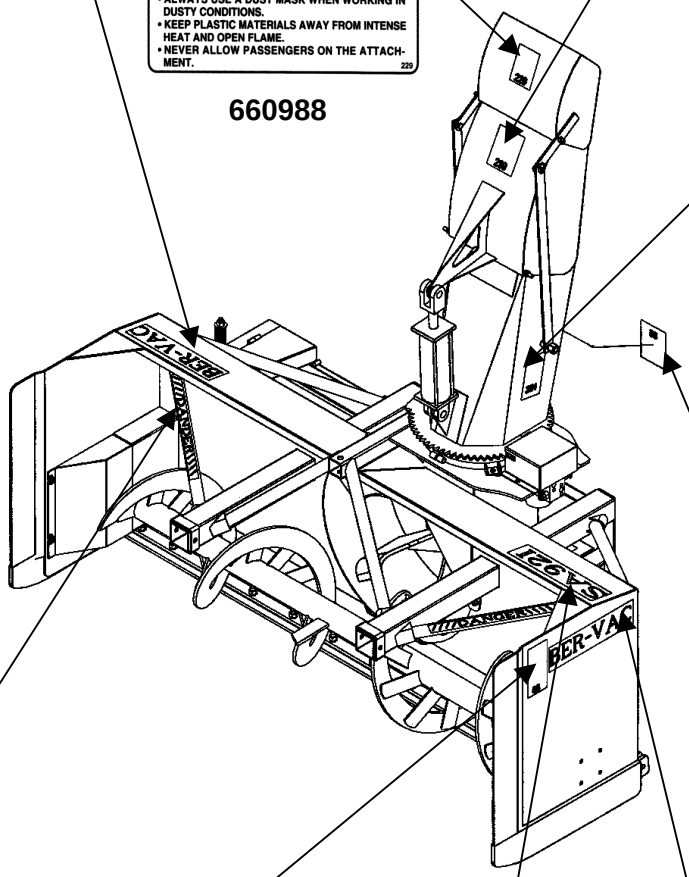

DANGER

AVOID INJURY FROM ROTATING GEARS:

- KEEP HANDS AND CLOTHING AWAY
- STOP ENGINE AND REMOVE IGNITION KEY BEFORE COMING NEAR ROTATING GEARS
- DO NOT ATTEMPT TO INSTALL OR REMOVE ROTATING GEARS WITHOUT READING OPERATOR'S MANUAL

ÉVITEZ LES BLESSURES PAR LES ENGRENAGES :

- GARDEZ MAINS ET VÊTEMENTS ÉLOIGNÉS
- ARRÊTEZ LE MOTEUR ET ENLEVEZ LA CLÉ DE CONTACT AVANT DE VOUS APPROCHER DES ENGRENAGES
- NE TENTEZ PAS D'INSTALLER OU D'ENLEVER LES ENGRENAGES SANS LIRE LE MANUEL D'OPÉRATEUR

384

2500330

DANGER

TO AVOID SERIOUS INJURY: KEEP HANDS OUT OF THIS DISCHARGE CHUTE WHILE ENGINE IS RUNNING

POUR ÉVITER DES BLESSURES GRAVES: GARDER LES MAINS ÉLOIGNÉES DE CETTE GOULOTTE LORSQUE LE MOTEUR EST EN MARCHE.

86

656779

Danger: 664383

DANGER

AVOID INJURY FROM ROTATING AUGER KEEP HANDS, FEET AND CLOTHING AWAY

POUR ÉVITER DES BLESSURES GRAVES: GARDER LES MAINS, LES PIEDS ET LES VÊTEMENTS ÉLOIGNÉS DES VIS SANS FIN

17

656780

SA92I: 665499

IMPORTANT
Before using:
–Oil level must be checked
–Fill with SAE 80W90, "AGMA 5 EP" extreme pressure oil or equivalent
–Read instructions manual

IMPORTANT
Avant usage:
–Vérifier le niveau d'huile
–Remplir avec de l'huile SAE 80W90, "AGMA 5EP" pression extreme ou equivalent
–Lire manuel d'instructions

21

655834

SNOWBLOWER ASSEMBLY

The snowblower is assembled at the factory, however, snowblower kits must be assembled. Use the present manual and lay out all parts for assembly. Separate bolts and nuts into various sizes. After assembly, torque all the bolts according to the Torque Specification Table enclosed at the end of the manual.

Driveline Installation

1. Remove paint from snowblower gear box drive shaft and grease driveline sliding surfaces and yoke.

2. Remove the two bolts of the yoke and slide driveline yoke over drive shaft using sliding action of the driveline. Make sure the driveline is well secured to the drive shaft by replacing the two bolts and tightening them according to the torque specification table.

Figure 1

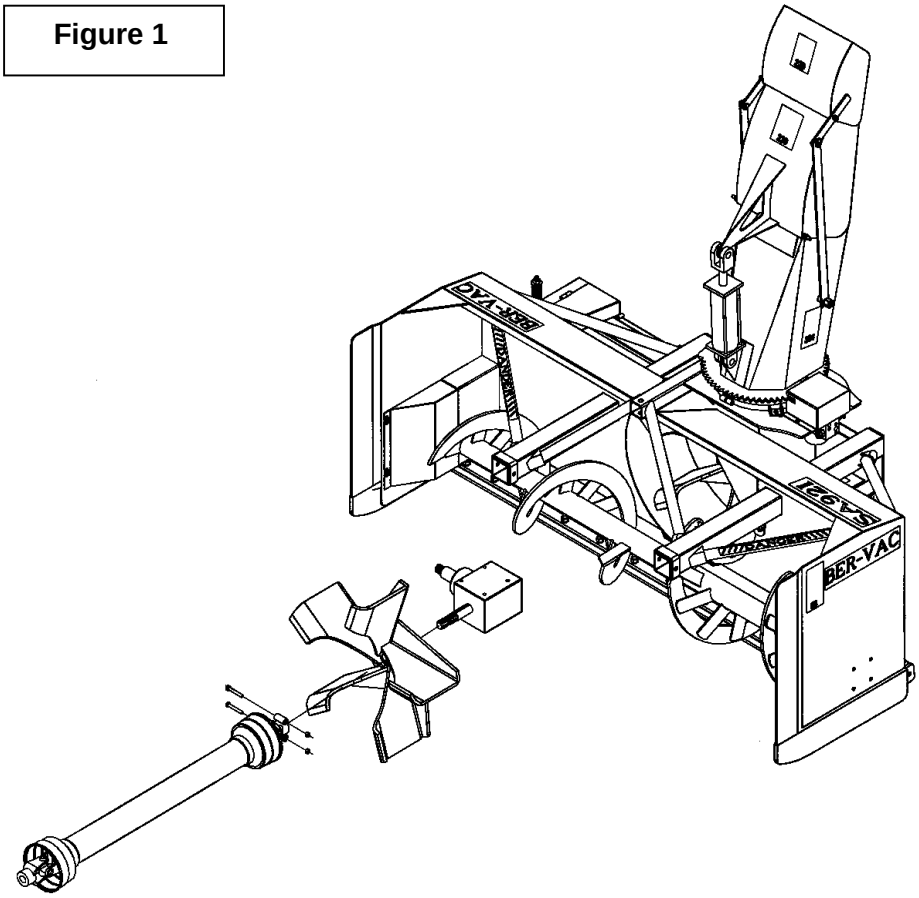

Three Point Hitch Installation
(Figure 2)

1. Install the lower left hitch and lower right hitch (items 1-2) on snowblower using two 5/8" x 5" bolts, lockwashers and nuts (items 13-14-15).
2. Install the left and the right attaching plates (items 3-4) to the lower hitches (items 1-2) using the top holes. Secure with two 3/4'' NC x 2'' bolts and 3/4"stover nuts (items 12-11).
3. Fasten each attaching plate (items 3-4) to the upper hitch (item 5) using a 3/4'' NC x 4 1/2" bolt and a 3/4" stover nut (items 9-11).
4. Attach upper hitch (item 5) to the snowblower tube using two 3/4'' NC x 4 1/2'' and 3/4" stover nuts (items 10-11).
5. Use the double support bracket (item 6), the 3/8" NC x 1" bolt hex. (item 7) and the 3/8" NC stover nut (item 8) to attach your hoses.

Note: We recommend using the driveline chain when storing the snowblower.

Figure 2

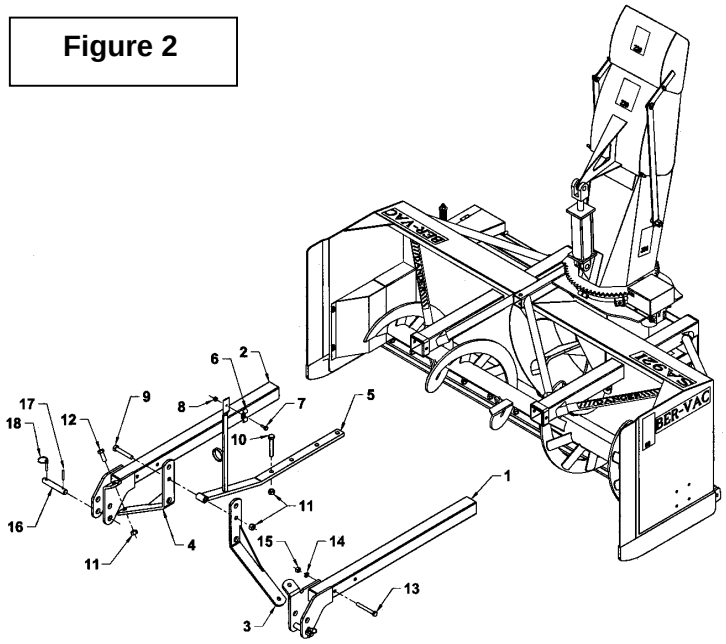

Installation with Quick Hitch
(Figure 3)

1. If your tractor is equipped with a three point quick hitch, you must provide the upper point pin (item 6) compatible with your hitch. Insert this pin in the lowest hole on the flat bars (item 5).
2. Insert the pins (item 3) in the upper holes on the hitch arms (item 2), as shown and secure with the linchpins (item 4).

Figure 3

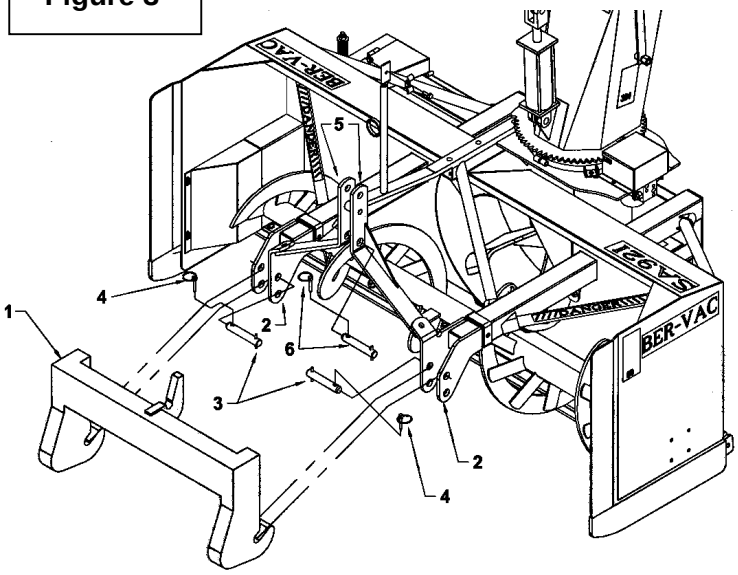

Snowblower Installation
(Figure 4)

1. Attach tractor lower hitch arms (item 1) to snowblower lower hitches using the attaching pins and the linch pins (items 6-2).
2. Install the tractor adjustable arm (item 3) on the upper hole of the snowblower attaching plates (item 5) using the tractor pins (item 4).
3. To level snowblower front to back, adjust using the tractor adjustable arm (item 3).
4. To level side to side, use leveling crank on right lower lift arm.
5. Set the tractor anti-sway turnbuckles so the snowblower does not sway. Be sure the turnbuckles clear the tractor tires.

WARNING: Before connecting snowblower driveline to tractor drive shaft, make sure driveline is not too long in raised, lowered or middle position. If the driveline is too long it must be shortened, to avoid damage to tractor.

6. Connect driveline to tractor drive P.T.O., making sure the driveline is well secured to the tractor.
7. Secure driveline safety chain to tractor master shield to prevent driveline shield from rotating.

Note: Depending on tractor used, it may be necessary to install front tractor weights to maintain front-end stability.

Detaching Snowblower from Tractor (Figure 4):

Select a level surface to detach. Remove driveline from the tractor's PTO. Detach adjustable arm (item 3). Detach right lower link (item 1) then, detach left lower link (item 1).

IMPORTANT: To avoid damage to the snowblower, retorque all bolts after the first 10 hours of operation.

Figure 4

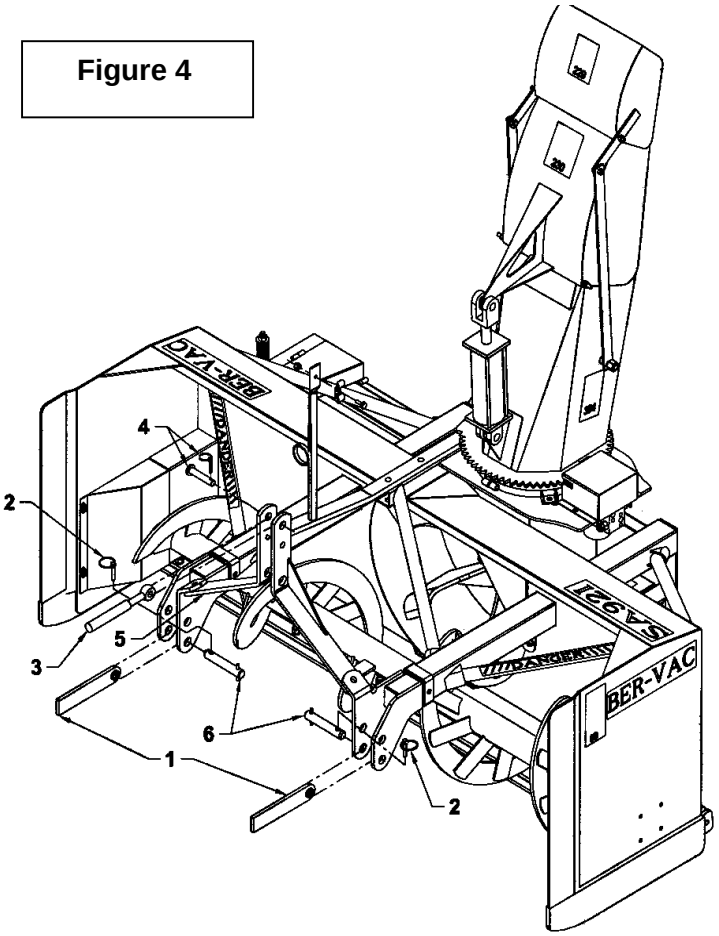

Chute Installation (Figures 5 & 5a)

1. **(STEP A)** Place a rotation bushing (item 4) on the housing, placing the joint of the bushing in the middle of the welded support (fig.5-5a, item 3).
2. **(STEP B)** Install the chute on the rotation bushing already in place on the housing, positioning the rear of the chute towards the welded support (item 3), as shown on figure 5a. Push the chute all the way in the support (item 3).
3. **(STEP C)** Install the other rotation bushing (item 4) by sliding it from side to side of the chute, placing the joint of the bushing in the middle of the welded support (item 3).
4. Place the chute support (item 5) on the housing and insert two 1/2" x 3 1/4" bolts (item 10) to join the two supports. Push the chute support until you are able to insert the the 5/8" x 1 1/2" bolts (item 6), 11/16" flatwashers (item 7), 5/8" lockwashers (item 8) and the 5/8" nuts (item 9).
5. Install the 1/2" nylon nuts (item 11) on each side and tighten evenly until the chute cannot be turned by hand anymore. Then, unscrew the chute by hand enough to be able to turn the chute. Finally, tighten securely the 5/8" nuts (item 9).
6. Fasten the motor (item 12) using four 3/8" x 3/4" bolts, lockwashers and flatwashers (items 13-14-15). Do not tighten bolts immediately
7. Place the gear of the motor (item 16) on the top of the motor, with hub facing down. Fasten the gear in place with a 1/4 " NC x 5/8" bolt and a 1/4" lockwasher (items 17-18). Tighten firmly. To avoid knocking of the two gears during rotation, adjust the distance between the two gears. Tighten the bolts on the motor according to the Torque Specification Table.
8. Attach the hydraulic rotation cover (item 19) using two 1/4" x 1" bolts, flatwashers, lockwashers and nuts (items 20-21-22-23). Tighten bolts according to the Torque Specification Table.

IMPORTANT: Tighten by hand only.

Figure 5

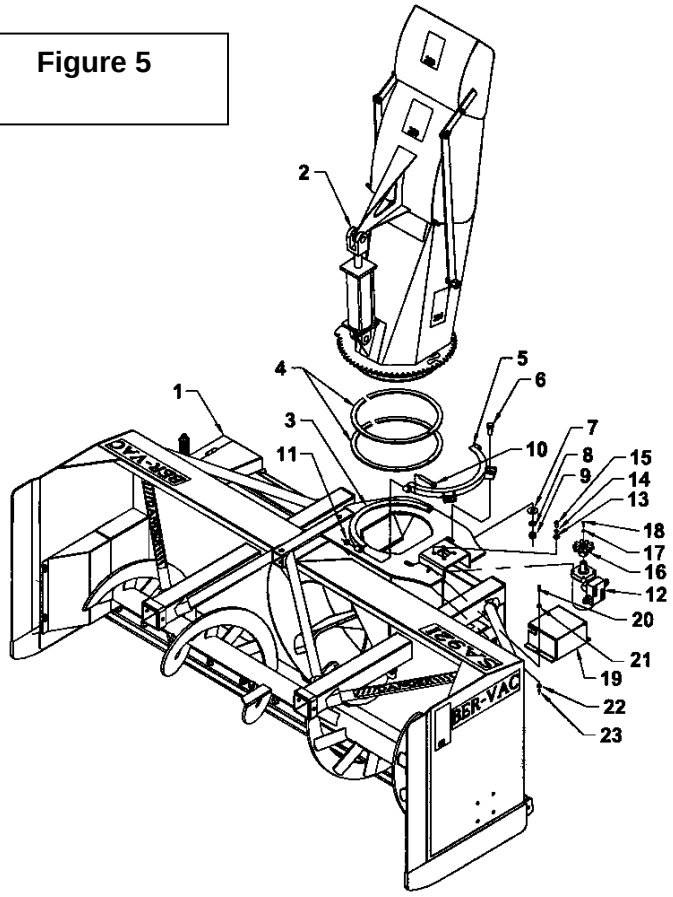

Figure 5a

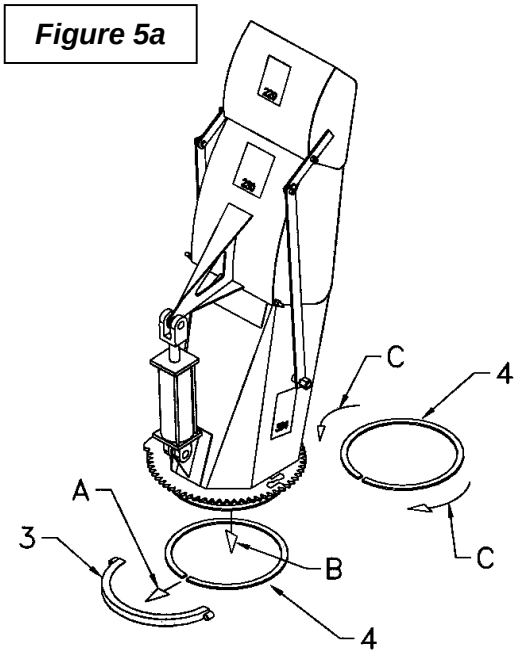

Rear Hydraulic Blade 8106A Installation (Optional) (Figure below)

1. Install the chosen cutting edge (items 5 or 6) between the blade (item 1) and the support bracket (item 7) with ten 1/2" x 2 1/2" carriage bolts, locwashers and nuts (items 8-9-10).
2. Attach the blade (item 1) to the snowblower, running the cylinders under the snowblower reinforcements, using four 5/8" x 2 1/2" bolts and stover nuts (items 3-4).
3. **Make sure that the cylinder ports (item 11) are facing the outside before attaching.**

Adjustment of Tivar Cutting Edge for Rear Hydraulic Blade

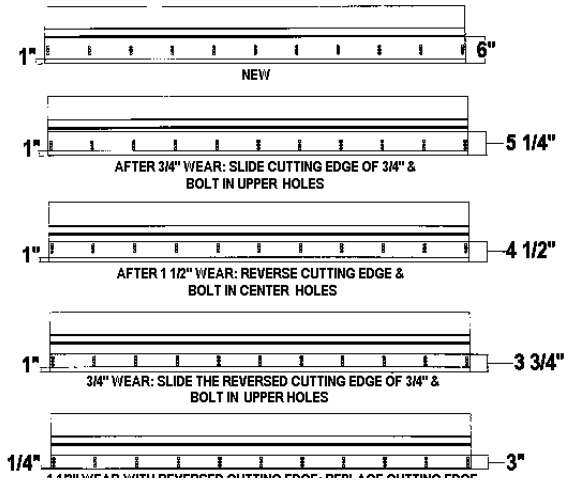

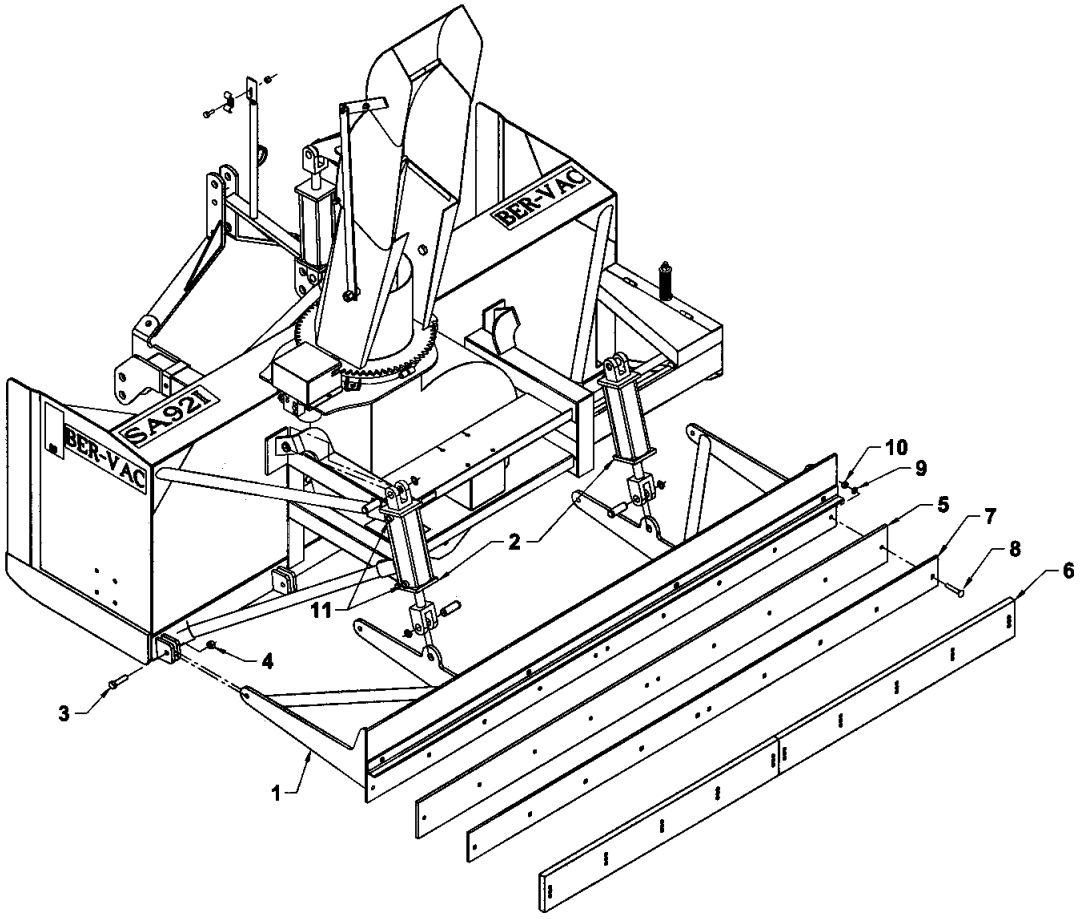

OPERATION

GENERAL PREPARATION

1. Read the operator's manual carefully before using the tractor and snowblower. Be thoroughly familiar with the controls and proper use of the equipment. Know how to stop the unit and disengage the controls quickly.

2. Make sure the snowblower is clear of snow before engaging the driveline.

3. Make sure the auger and fan operate freely.

4. Check the oil level in the worm gear box and if necessary, add SAE 80W90 gear oil, AGMA 5EP or equivalent.

5. Check the three shear bolts, one on each auger section and one between the fan and gearbox for proper tightness.

6. Adjust so that the snowblower skid shoes run level.

7. Wear adequate winter outer garments while operating equipment.

OPERATING CONTROLS

Raising and Lowering the Snowblower

Move the three point lever on right hand side of seat down or forward to lower, and up or rearward to raise.

Drive Shaft Operation

The mid drive shaft is activated by pulling up the drive shaft lever on left side of seat. Push down to disengage.

WARNING: To avoid personal injury, be sure the tractor engine is off, the drive shaft disengaged, and all movement has stopped before making any adjustments.

Deflector Adjustment

Set the angle of deflection according to the distance the snow must be thrown. To set the deflector angle, loosen the two deflector knobs, adjust the deflector to the appropriate angle, and retighten the two knobs securely.

Work and Travel Speed

Working ground speed will depend on the depth and density of the snow to be cleared. Normally, ground speed will range from 4 to 7 MPH for light, dry snowfalls 3 to 6 inches, and 1 to 3 MPH for heavy, wet or drifted snow. To transport, disengage the driveshaft and raise the snowblower to full transport height.

SNOW REMOVAL METHODS

When removing snow, do not use the snowblower as a dozer blade to push snow. Let the snowblower work its way through deep drifts. If the speed of your tractor is too fast, the snowblower may become overloaded and clog. For best results, raise the snowblower and remove a top layer of snow. A second pass with the snowblower will remove the remaining snow.

IMPORTANT : Use full RPM power when removing wet, sticky snow. Low RPM power will tend to clog the chute.

WARNING: Do not use hands or feet to unclog chute. Do not attempt to clear clogged chute of snow while tractor engine is running. If the chute clogs, disengage the drive shaft, shut off the tractor engine, remove the ignition key, wait for all movement to stop, and then clear the snow from the chute.

A definite pattern of operation is required to thoroughly clean the snow area. These patterns will avoid throwing snow in unwanted places as well as eliminating a second removal of snow

PATTERN 1

DISCHARGE SNOW BOTH SIDES

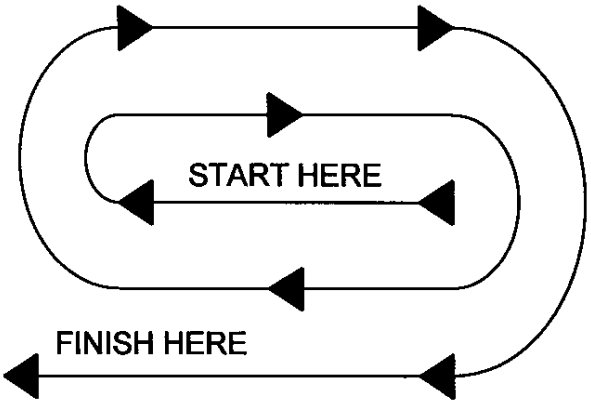

DISCHARGE SNOW BOTH SIDES

PATTERN 2

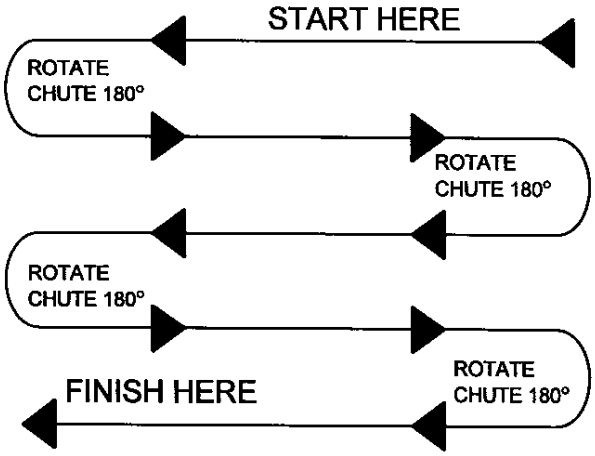

DISCHARGE SNOW THIS SIDE ONLY

Where it is possible to throw the snow to the left and right (above), as on a long driveway, it is advantageous to start in the middle. Plow from one end to the other, throwing snow to both sides without changing the direction of the discharge guide

If the snow can only be thrown to one side of the driveway or sidewalk (above), start on the opposite side. At the end of the first pass, rotate the discharge guide 180 degrees for the return pass. At the end of each succeeding pass, rotate the discharge guide 180 degrees to maintain direction of throw in the same area.

MAINTENANCE

Storage

1. Check the shear bolts at frequent intervals for proper tightness to be sure the blower is in safe working condition.

2. Never store the tractor with fuel in the fuel tank inside a building where open flame or sparks are present. Allow the engine to cool before storing in any enclosure.

3. Run the snowblower a few minutes after blowing snow to prevent freeze up of the auger and the impeller.

WARNING: Provide adequate blocking before working under the snowblower when in the raised position.

Driveline

IMPORTANT: When the snowblower is not used for more than two weeks, perform driveline maintenance and always store it in a dry place, away from bad weather conditions.

Lubrication (see Diagram below)

1. **GEAR** : Check the oil level in the worm gear drive every month. If necessary add SAE 80W90 gear oil, AGMA 5EP extreme pressure oil or equivalent.

2. **AUGER SECTIONS** : Grease the fitting on each auger sections every 24 hours of operation or once a year.

3. **REDUCTION BY CHAIN** : Lubricate with chain saw lubricant every 4 hours of operation and after each use.

4. **ROTATION SHAFT** : Grease the shaft each 8 hours of operation.

5. **DRIVELINE (S)** : Grease each u-joint fitting every 8 hours of operation. Slide drive shaft apart and coat sliding surfaces with grease every 8 hours of operation.

6. **DOUBLE CHAIN IDLER SECTIONS:** Grease the areas of the mechanism that have a grease fitting every 24 hours.

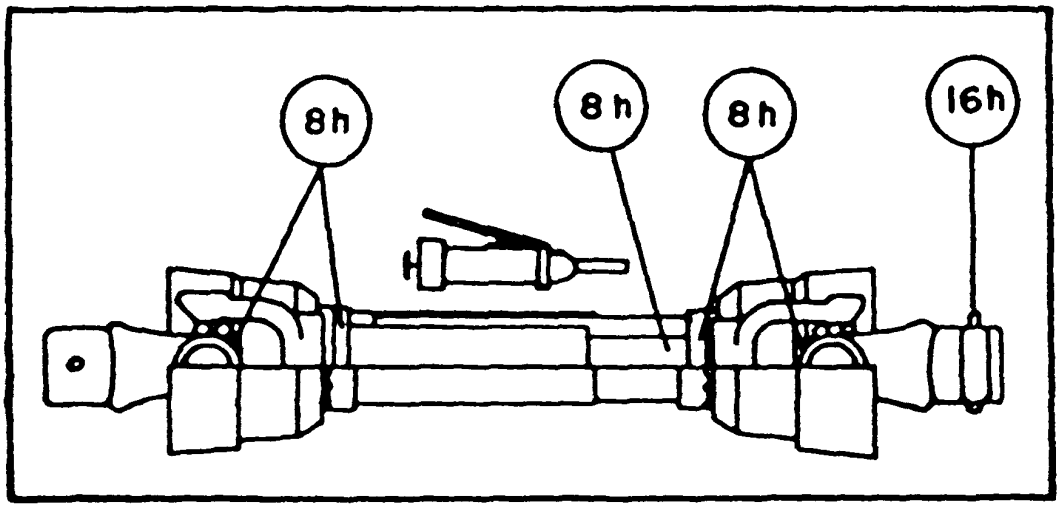

PARTS

INTRODUCTION

All parts are illustrated in "exploded views" which show the individual parts in their normal relationship to each other. Reference numbers are used in the illustrations. These numbers correspond to those in the "Reference Number" (REF) column, and are followed by the description and quantity required.

O/L - "Obtain Locally" in the part number column indicates common hardware that is available at your local hardware supply.

All reference to right and left, forward or rearward, are from the operator's seat, facing the steering wheel.

Orders must give the complete description, correct part number, the total amount required, the serial number, the method of shipment and the shipping address.

The manufacturer reserves the rights to change, modify, or eliminate from time to time, for technical or other reasons, certain or all data, specifications, or the product or products themselves, without any liability or obligation.

SNOWBLOWER SA92IA

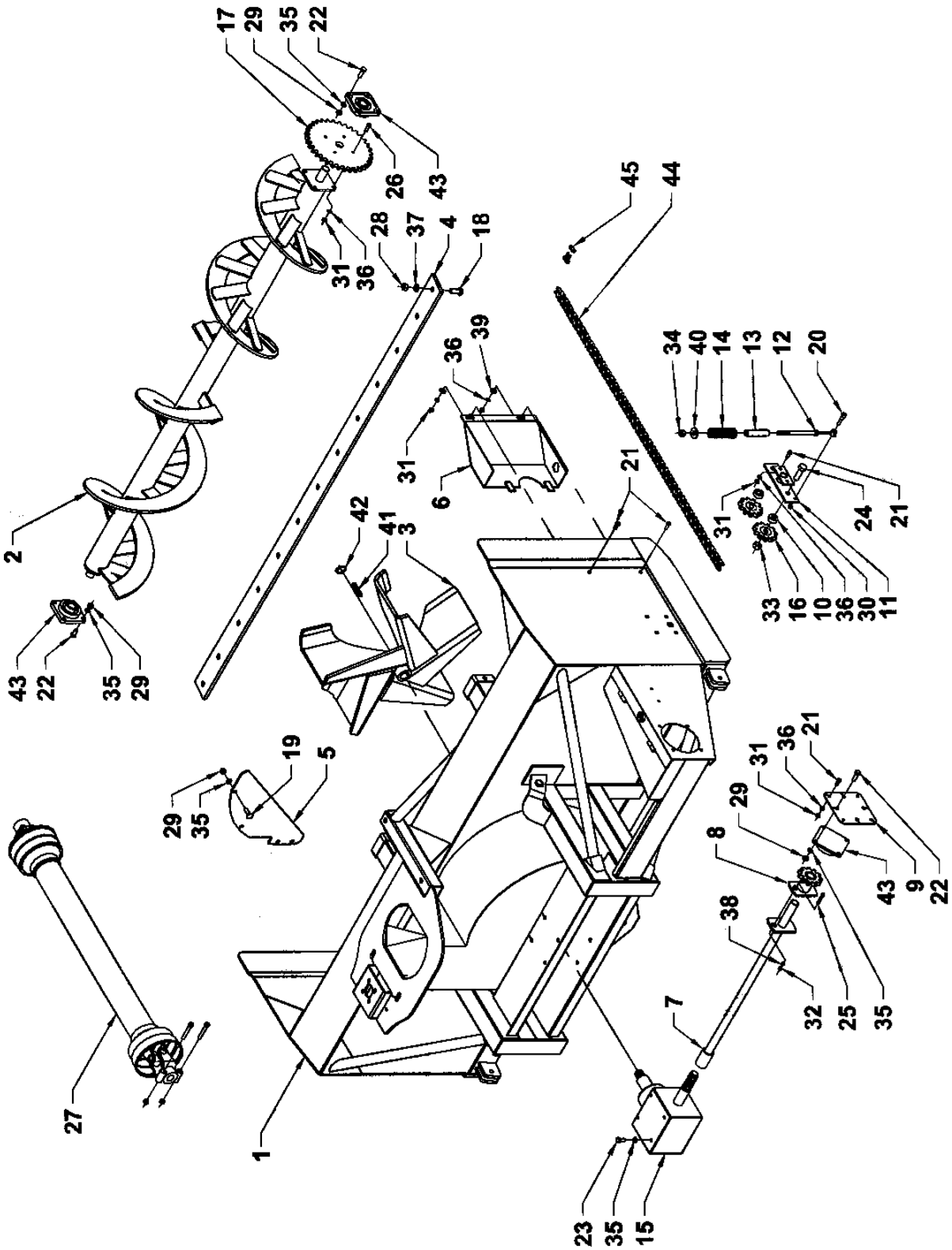

SNOWBLOWER SA92IA

REF.	DESCRIPTION	QTY.	PART #
1	Housing	1	----
2	Auger	1	665207
3	Fan	1	665521
4	Cutting edge	1	666401
5	Restriction plate	1	666399
6	Front guard	1	665282
7	Drive shaft	1	665249
8	Shear plate	1	655960
9	Drive support	1	662687
10	Idler spacer 9/16"	2	662046
11	Double chain idler	1	665281
12	Idler lever	1	665204
13	Spring guide	1	664841
14	Compression spring 1.300 x 8"	1	664876
15	Gearbox	1	665459
16	Sprocket 80A24, 1 1/4" hole	1	665268
17	Sprocket 80A11	2	654756
18	Plow bolt 5/8" NC x 1 1/2" gr.5 PTD	13	O/L
19	Carriage bolt 1/2" NC x 1 1/4" gr.5 PTD	4	O/L
20	Shoulder bolt 1/2" x 3/4"	1	664577
21	Bolt hex. 3/8" NC x 1" gr.5 PTD	8	O/L
22	Bolt hex. 1/2" NC x 1 1/2" gr.5 PTD	8	O/L
23	Bolt hex. 1/2" NC x 1" gr.5 PTD	8	O/L
24	Bolt hex. 3/4" NC x 2 1/4" gr.5 PTD	2	O/L
25	Bolt hex. 5/16" NC x 2" gr.5 PTD	1	O/L
26	Bolt hex. 3/8" NC x 1 1/2" gr.5 PTD	4	O/L
27	Driveline	1	665227
28	Nut hex 5/8" NC PTD	13	O/L
29	Nut hex 1/2" NC PTD	16	O/L
30	Stover nut 3/8" NC PTD	1	O/L
31	Nut hex 3/8" NC PTD	12	O/L
32	Nut hex 5/16" NC PTD	1	O/L
33	Stover nut 3/4" NC PTD	2	O/L
34	Stover nut 5/8" NC PTD	1	O/L
35	Lockwasher 1/2" PTD	24	O/L
36	Lockwasher 3/8" PTD	12	O/L
37	Lockwasher 5/16" PTD	13	O/L
38	Lockwasher 5/8" PTD	1	O/L
39	Flatwasher 7/16" PTD	2	O/L
40	Flatwasher 11/16" PTD	1	O/L
41	Key 3/8" x 3/8" x 2 3/4"	1	654174
42	Retaining ring 1 1/2"	1	665253
43	Bearing 1 1/4" hole, 4 holes, 2 grease fittings	3	4300001
44	Chain #80 x 72 links	1	665286
45	Connecting link #80	1	3300007

THREE POINT HITCH

REF.	DESCRIPTION	QTY	PART #
1	Left hitch	1	666402
2	Right hitch	1	666403
3	Left flatbar	1	666404
4	Right flatbar	1	666406
5	Upper hitch	1	665079
6	Double support bracket	1	665287
7	Bolt hex. 3/8" NC x 1" gr.5 PTD	1	O/L
8	Stover nut 3/8" NC PTD	1	O/L
9	Bolt hex. 3/4" NC x 4 1/2" gr.5 PTD	3	O/L
10	Stover nut 3/4" NC PTD	5	O/L
11	Bolt hex. 3/4" NC x 2" gr.5 PTD	2	O/L
12	Bolt hex. 5/8" NC x 5" gr.5 PTD	2	O/L
13	Lockwasher 5/8" PTD	2	O/L
14	Nut hex. 5/8" NC PTD	2	O/L
15	Pin cat.2	2	656322
16	Linch pin 7/16" PTD	2	O/L

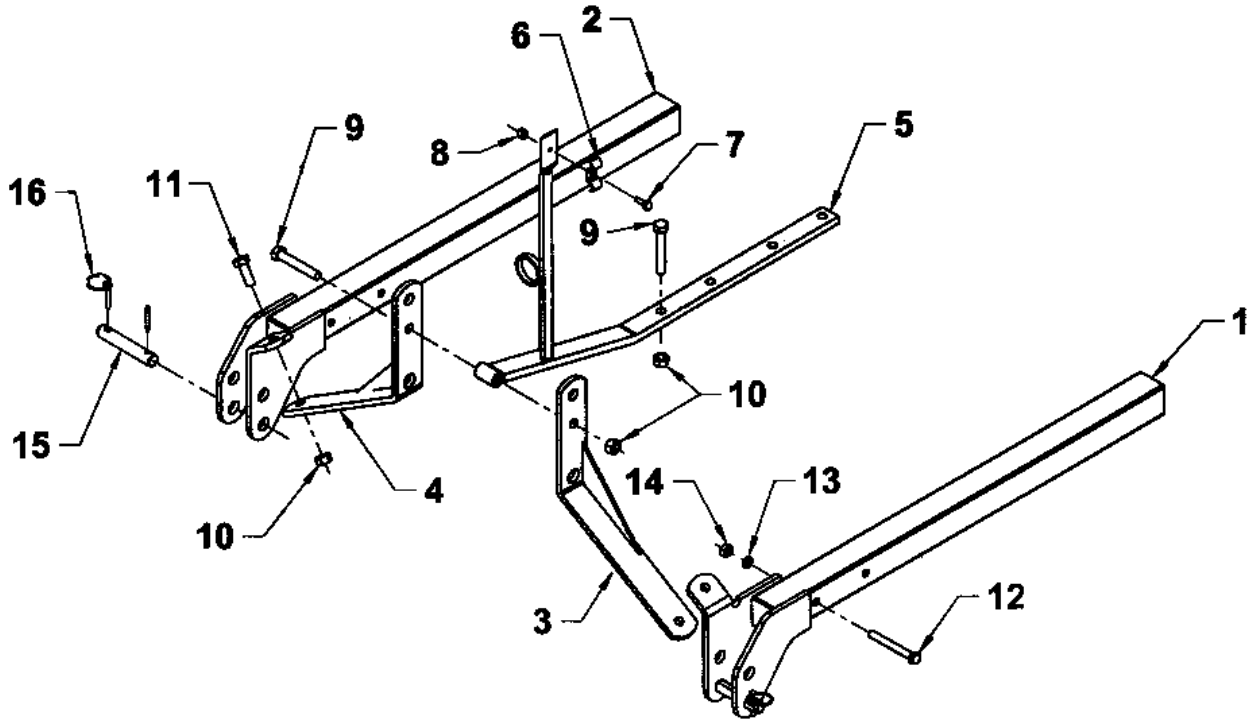

CHUTE SEMI-INDUSTRIAL – 666461

REF.	DESCRIPTION	QTY.	PART #
1	Deflector	1	666448
2	Central deflector	1	666447
3	Chute base	1	666449
4	Hinge rod	2	666297
5	Stover hex. nut 7/16" NC PTD	4	O/L
6	Chute flatbar	2	666463
7	Chute spacer	2	666464
8	Nylon insert locknut 3/4" NC PTD	2	O/L
9	Bolt hex. 7/16" NC x 1 1/4" gr.5 PTD	2	O/L
10	Flatwasher 7/16" hole dia. PTD	2	O/L

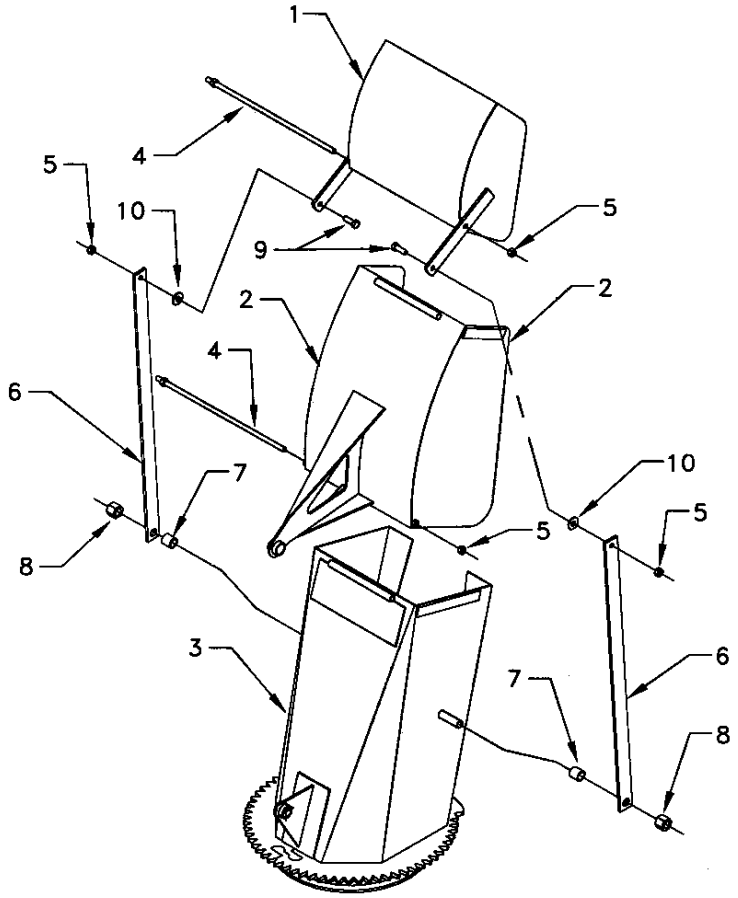

HYDRAULIC ROTATION

REF.	DESCRIPTION	QTY	PART #
1	Anti-friction strip 1/4" x 3/4" "UHMW"	2	665962
2	Retaining plate	1	665961
3	Hydraulic rotation cover	1	666400
4	Motor gear	1	665930
5	Motor & valve ass'y with key clé 1/4" x 1/4" x 3/4"	1	666253
6	Bolt hex. 1/2" NC x 3 1/4" gr.5 PTD	2	O/L
7	Bolt hex. 5/8" NC x 1 1/2" gr.5 PTD	2	O/L
8	Bolt hex. 1/4" NC x 1" gr.5 PTD	2	O/L
9	Bolt hex. 1/4" NC x 5/8" gr.5 PTD	1	O/L
10	Nylon insert locknut 1/2" NC PTD	2	O/L
11	Nut hex. 5/8" PTD	2	O/L
12	Nut hex. 5/16" NC	2	O/L
13	Lockwasher 5/8" PTD	2	O/L
14	Lockwasher 1/4" PTD	3	O/L
15	Flatwasher 11/16" hole PTD	2	O/L
16	Flatwasher 5/16" hole PTD	2	O/L

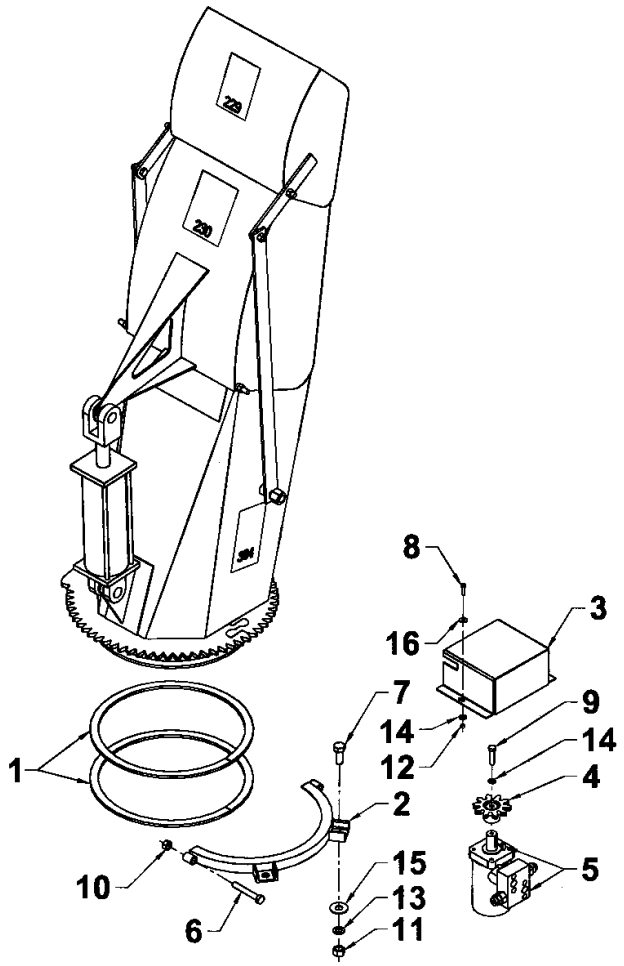

GEARBOX (665459)

REF.	DESCRIPTION	QTY	PART #
1	Housing	1	656640
2	Grommet	1	656650
3	Exterior retaining ring	1	656652
4	Spacer	2	656649
5	Bearing	1	656653
6	Spacer	1	656648
7	Interior retaining ring	1	656654
8	Bearing	1	656647
9	Shaft	1	656651
10	Gear	1	656645
11	Exterior retaining ring	1	656646
12	Bearing	2	656641
13	Spacer	1	656644
14	Interoir retaining ring	2	656642
15	Seal	2	656643
16	Shaft	1	665006
17	Gear	1	656657
18	Spacer	1	656655
19	Plug	1	656662
20	Cover	1	656660
21	Bolt hex. M10 x 14	4	656659
22	Plug 3/8" NPT	2	656259

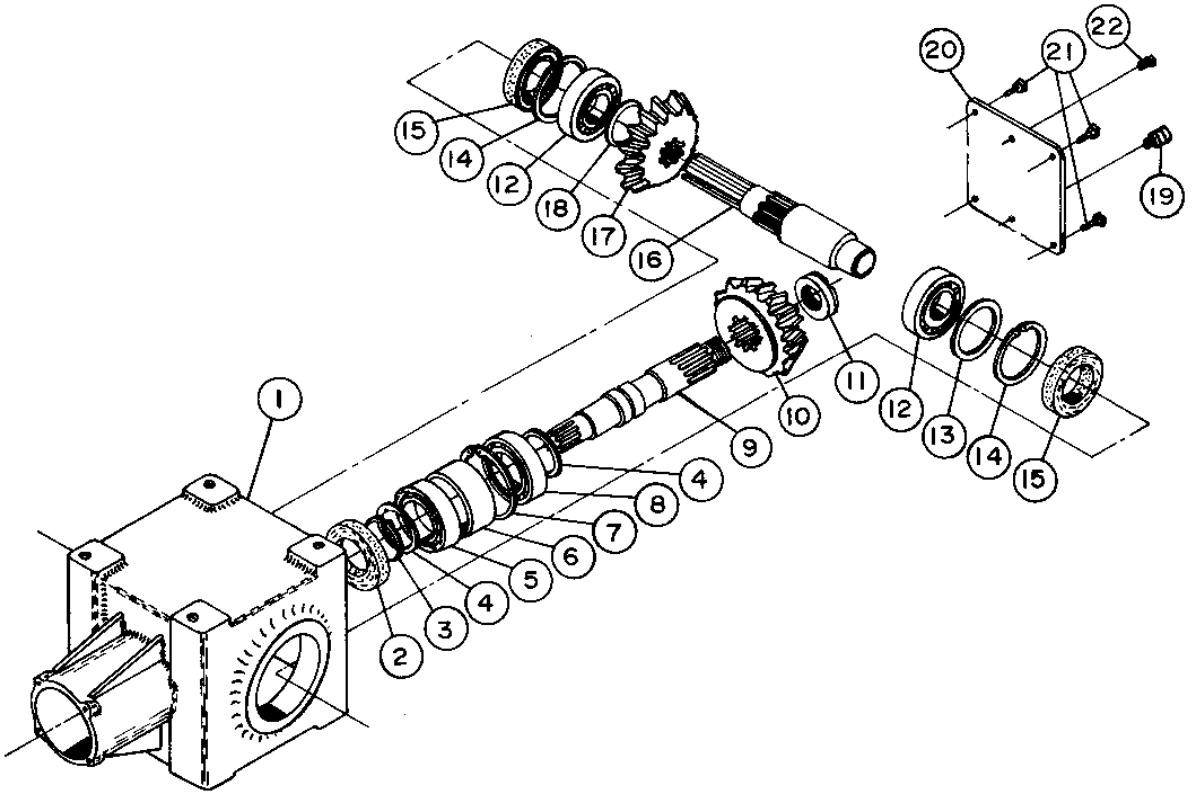

DRIVELINE –665227

REF.	DESCRIPTION	QTY	PART #
1	Yoke ass'y	1	663133
2	Universal joint	2	663134
3	Yoke for female tube	1	663136
4	Female tube	1	665531
5	Male tube	1	665532
6	Yoke for male tube	1	663144
7	Yoke and hub ass'y	1	663145
8	Bolt and nut	2	662199
9	Grease fitting	1	663148
10	Ball 5/16"	24	663162
11	Shear bolt and nut	1	663149
12	Protector and chain	1	665533
13	Safety pin	1	663151

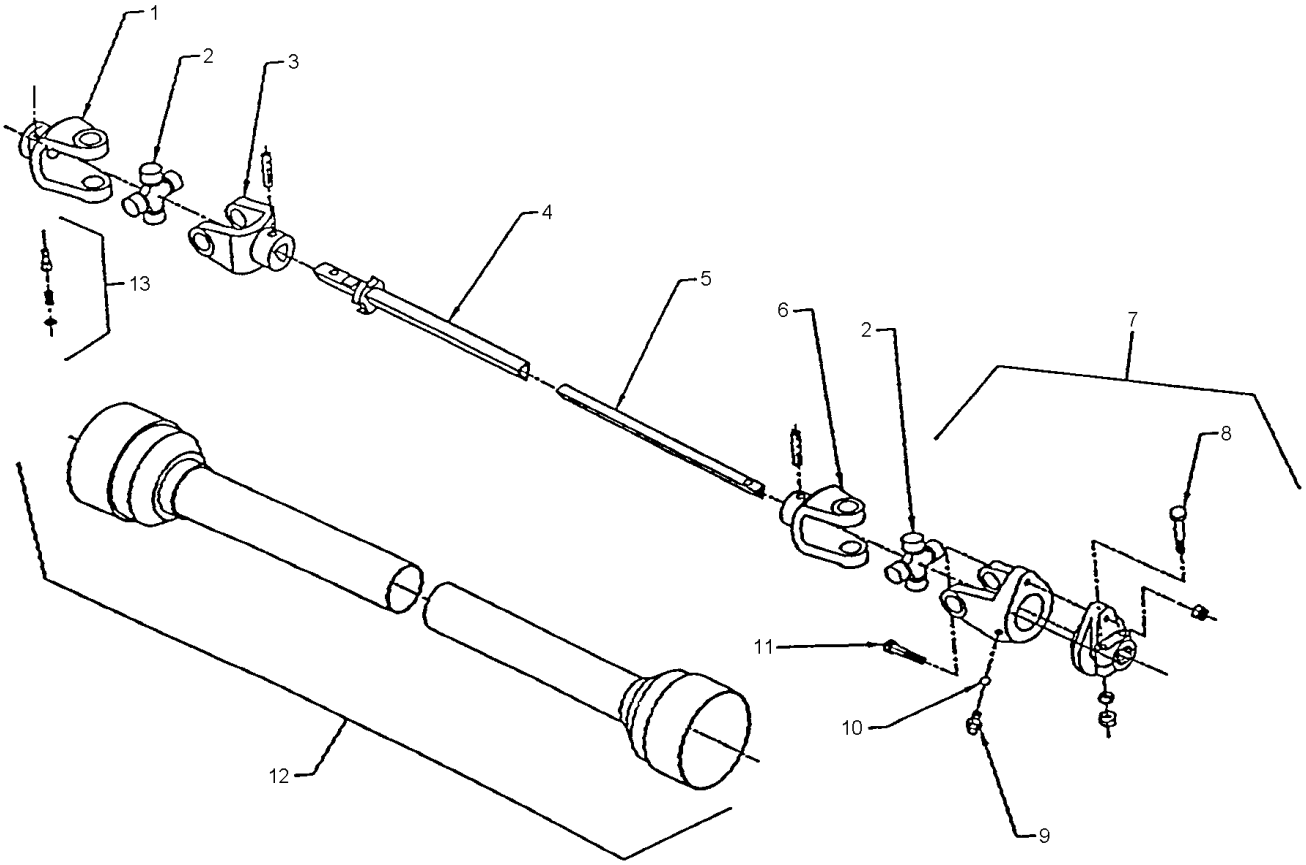

REAR HYDRAULIC BLADE 8106A (OPTION)

REF.	DESCRIPTION	QTY.	PART #
1	Rear blade	1	665278
2	Cutting edge support bracket	1	665280
3	Cylinder and pins 3" x 8"	2	654129
	Seal kit	1	664176
4	Stover nut 5/8" NC	4	O/L
5	Hex. bolt 5/8" NC x 2 1/2"	4	O/L
6	Carriage bolt 1/2" NC x 1 1/2"	10	O/L
7	Lockwasher 1/2"	10	O/L
8	Hex. nut 1/2" NC	10	O/L
9	**Steel cutting edge optional**	1	**8123**
10	**Tivar cutting edge optional (2 sections)**	1	**8124**

***O/L = Obtain Locally**

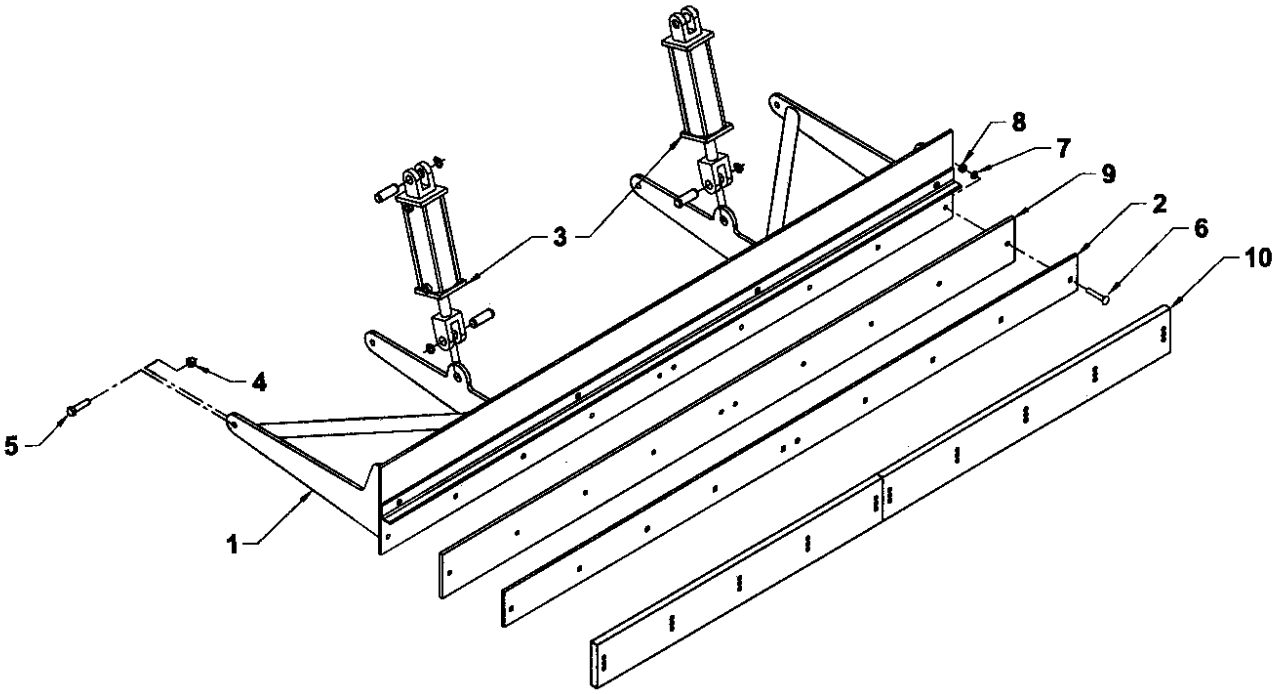

RAD TECHNOLOGIES INC.

RAD TECHNOLOGIES INC. warrants to the original buyer that the equipment is free from defects in material and workmanship. RAD TECHNOLOGIES INC.'s obligation, under this warranty, will be limited to the repair or replacement of any non-wear part or component, which RAD TECHNOLOGIES INC. finds to be defective within **one year** from the date of original purchase (unless otherwise-specified). The applicable warranty period for commercial or rental use shall be ninety (90) days from the date of purchase

In no event shall RAD TECHNOLOGIES INC. be liable for consequential, special, direct or indirect damages incurred by the buyer/user.

All components not manufactured by RAD TECHNOLOGIES INC. (such as motors, actuators, hydraulic components, tires, ...etc.) are covered by the original manufacturer's warranty in conjunction with RAD TECHNOLOGIES INC.

RAD's obligation under this warranty shall be limited to repairing or replacing, free of charge to the original purchaser, any part that, in RAD's judgment, shall show evidence of such defect, provided the **distributor** returns the part prepaid within thirty (30) days from date of failure.

This warranty shall not be interpreted to render RAD TECHNOLOGIES INC. liable for injuries or damages of any kind or nature to person or property. This warranty does not extend to losses because of delays, or to any expenses or losses incurred for labor, substitute machinery, rental or for any other reason.

Except as set forth above, RAD TECHNOLOGIES INC. shall have no obligation or liability of any kind on account of any of its equipment and shall not be liable for special or consequential damages. RAD TECHNOLOGIES INC. makes no other warranty, expressed or implied, and specifically, RAD TECHNOLOGIES INC. disclaims any implied warranty or merchantability or fitness for a particular purpose**. Some states or provinces do not permit limitations or exclusions of implied warranties or incidental or consequential damages, so the limitations or exclusions in this warranty may not apply.**

This warranty is subject to any existing conditions of supply, which may directly affect our ability to obtain materials or manufacture replacement parts. RAD TECHNOLOGIES INC. reserves the right to make improvements in design or changes in specifications at any time, without incurring any obligation to owners of units previously sold.

No one is authorized to alter, modify or enlarge this warranty nor the exclusions, limitations and reservations.

2835 Chemin de l'Aéroport, Thetford Mines (Québec) G6G 5R7
Tél.: (418) 338-4499 Fax: (418) 388-6090
Internet: www.radinter.com EMAIL: radtech@radinter.com

TORQUE SPECIFICATION TABLE

GENERAL SPECIFICATION TABLE

Use the following torques when special torques are not given Note: These values apply to fasteners as received from supplier, when dry. These values do not apply if lubricants are used.

BOLT SIZES (SAE)	TORQUE	
INCHES	**Pounds-Foot**	**Newtons-Meter**
1/4	5	7
5/16	10	14
3/8	20	27
7/16	25	41
1/2	88	119
9/16	121	164
5/8	165	224
3/4	297	403
7/8	440	597
1	638	865
1 1/8	840	1139
1 1/4	1180	1600
1 3/8	1570	2129
1 1/2	2070	2807

BOLT SIZES (METRIC)	TORQUE	
MILLIMETERS	**Pounds-Foot**	**Newtons-Meter**
M6	10	13
M8	22	30
M10	40	54
M12	59	80
M14	93	126
M16	130	176
M18	168	228
M20	205	278

Manufactured by:

RAD Technologies Inc.
2835, Chemin de l'Aéroport
Thetford Mines, Québec, Canada, G6G 5R7
Tel.: (418) 338-4499 - Fax.: (418) 338-6090
E-mail : radtech@radinter.com
Internet : www.radinter.com

Printed in Canada